Smart choice for power™

xantrex™

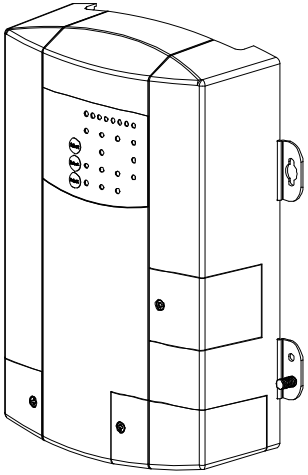

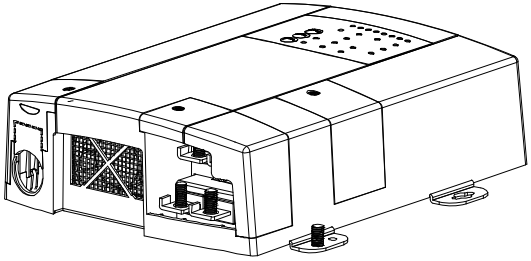

TRUECHARGE™2 Series Battery Charger

Owner's Guide

Product Numbers

Non-IEC Models	IEC Models
804-1220-02,	804-1220-03,
804-1240-02,	804-1240-03,
804-1260-02,	804-1260-03
804-2410,	804-2410-01,
804-2420,	804-2420-01,
804-2430	804-2430-01

Copyright © 2021 Xantrex LLC. All rights reserved. All trademarks are owned by Xantrex LLC or its affiliated companies.

Exclusion for Documentation

UNLESS SPECIFICALLY AGREED TO IN WRITING, SELLER

(A) MAKES NO WARRANTY AS TO THE ACCURACY, SUFFICIENCY OR SUITABILITY OF ANY TECHNICAL OR OTHER INFORMATION PROVIDED IN ITS MANUALS OR OTHER DOCUMENTATION;

(B) ASSUMES NO RESPONSIBILITY OR LIABILITY FOR LOSSES, DAMAGES, COSTS OR EXPENSES, WHETHER SPECIAL, DIRECT, INDIRECT, CONSEQUENTIAL OR INCIDENTAL, WHICH MIGHT ARISE OUT OF THE USE OF SUCH INFORMATION. THE USE OF ANY SUCH INFORMATION WILL BE ENTIRELY AT THE USER'S RISK; AND

(C) REMINDS YOU THAT IF THIS MANUAL IS IN ANY LANGUAGE OTHER THAN ENGLISH, ALTHOUGH STEPS HAVE BEEN TAKEN TO MAINTAIN THE ACCURACY OF THE TRANSLATION, THE ACCURACY CANNOT BE GUARANTEED. APPROVED CONTENT IS CONTAINED WITH THE ENGLISH LANGUAGE VERSION WHICH IS POSTED AT WWW.XANTREX.COM.

NOTE: Visit http://www.xantrex.com/ , click Products, select a Product category, select a Product, and search the Product Documents panel for a translation of the English guide, if available.

Date and Revision

August 2021 Rev E

Document Part Number

975-0526-01-02

Product Numbers

Non-IEC Models	IEC[a] Models
804-1220-02,	804-1220-03,
804-1240-02,	804-1240-03,
804-1260-02,	804-1260-03
804-2410,	804-2410-01,
804-2420,	804-2420-01,
804-2430	804-2430-01

a.IEC refers to the international standard from the International Electrotechnical Commission for "plugs, socket-outlets and couplers for industrial purposes". IEC models have an AC input receptacle that connects with an IEC cable (not provided).

Contact Information

Telephone:	1 800 670 0707 (Toll Free USA/Canada) 1 408 987 6030 (Outside USA/Canada)
Email:	customerservice@xantrex.com, http://www.xantrex.com/power-products-support/
Web:	www.xantrex.com

Information About Your System

Serial Number: _____

Product Number: _____

Purchased From: _____

Purchase Date: _____

About This Guide

Purpose

The purpose of this Owner's Guide is to provide explanations and procedures for installing, troubleshooting, operating and maintaining the Truecharge2 Series Battery Charger for Recreational, Commercial and Fleet Vehicle, or Marine installations.

Scope

The Guide provides safety and operating guidelines, procedures for installing the battery charger, as well as information on configuring the battery charger. It also provides information about troubleshooting the unit. It does not provide details about particular brands of batteries. You need to consult individual battery manufacturers for this information.

Audience

The Guide is intended for users and operators of the Truecharge2 Series Battery Charger. The Installation section is intended for qualified installers who need to install and configure any unit model of the Truecharge2 Series Battery Charger.

Qualified personnel have training, knowledge, and experience in:

- Installing electrical equipment,
- Aapplying all applicable installation codes,
- Analyzing and reducing the hazards involved in performing electrical work,
- Selecting and using Personal Protective Equipment (PPE).

Abbreviations and Acronyms

A	Amperes
Ah	Amp-hours (a unit of battery capacity)
AC	Alternating Current [Vac symbol]
ACC	Accessory in vehicle ignition system
AGM	Absorbed Glass Mat (a battery type)
BTS	Battery Temperature Sensor
DC	Direct Current [A DC symbol]
GFCI	Ground Fault Circuit Interrupter
Hz	Hertz (a unit of frequency)
in-lb	inch-pound force (a unit of torque)
kW	Kilowatts (1000 watts)
LBCO	Low Battery Cutout (or Cutoff)
LCD	Liquid Crystal Display
LED	Light Emitting Diode
LFP	LiFePO4 (lithium iron phosphate – a battery type)
N-m	Newton-meters (a unit of torque)
PN	Product Number
PPE	Personal Protective Equipment
s	Seconds (a unit of time)
V, VAC, VDC	Voltage, Volts AC, Volts DC
W	Wattage, watt (a unit of power)

Related Information

You can find more information about Xantrex-branded products and services at **www.xantrex.com**.

Important Safety Instructions

IMPORTANT: READ AND SAVE THIS OWNER'S GUIDE FOR FUTURE REFERENCE.

This chapter contains important safety and installation instructions for the Truecharge2 Series Battery Chargers. Each time, before using the Truecharge2 Series Battery Charger, READ ALL instructions and cautionary markings on or provided with the battery charger, the batteries, and all appropriate sections of this guide.

NOTE: The Truecharge2 Series Battery Charger contains no user-serviceable parts with the exception of the DC output fuse(s) which are user-replaceable. See "Replacing the DC Output Fuse" on page 48 for instructions. For obtaining service other than replacing the fuse, contact customer service for guidance.

NOTE: The Truecharge2 Series Battery Charger must be provided with equipment-grounding conductors connected to the AC input ground and to the DC chassis ground. See "Step 2: Connecting the DC Chassis Ground (Earth)" on page 17 for instructions.

⚡	The addition of either symbol to a "**Danger**" or "**Warning**" safety label indicates that an electrical hazard exists which will result in personal injury if the instructions are not followed.
⚠	This is the safety alert symbol. It is used to alert you to potential personal injury hazards. Obey all safety messages that follow this symbol to avoid possible injury or death.

⚠ DANGER

DANGER indicates an imminently hazardous situation which, if not avoided, will result in death or serious injury.

⚠ WARNING

WARNING indicates a potentially hazardous situation which, if not avoided, can result in death or serious injury.

⚠ CAUTION

CAUTION indicates a potentially hazardous condition which, if not avoided, can result in minor or moderate injury.

NOTICE

NOTICE indicates a potentially hazardous situation, which, if not avoided, can result in equipment damage.

IMPORTANT: These notes describe things which are important for you to know, however, they are not as serious as a danger, warning, or caution.

⚠ DANGER

ELECTRICAL SHOCK HAZARD

- Do not expose the Truecharge2 Battery Charger to rain, snow, spray, or bilge water.
- Do not operate the battery charger if it has received a sharp blow, been dropped, has cracks or openings in the enclosure including if the fuse cover has been lost, damaged, or will not close, or otherwise damaged in any other way.
- Do not disassemble the battery charger. Internal capacitors remain charged after all power is disconnected.
- Disconnect both AC and DC power from the battery charger before attempting any maintenance or cleaning or working on any circuits connected to the battery charger. See note below.
- Do not operate the battery charger with damaged or substandard wiring. Make sure that all wiring is in good condition and is not undersized. See “Wiring Requirements” on page 12 for guidance.

Failure to follow these instructions will result in death or serious injury.

NOTE: Turning off the battery charger using the on/standby button on the optional remote panel will not reduce an electrical shock hazard.

⚠ DANGER

FIRE AND BURN HAZARD

Do not cover or obstruct the air intake vent openings and/or install in a zero-clearance compartment. See “Location” on page 10 for proper location requirements.

Failure to follow these instructions will result in death or serious injury.

⚠ DANGER

EXPLOSION HAZARD

- Charge only properly rated (such as 12 V and 24 V) lead-acid (GEL, AGM, Flooded, or lead-calcium) rechargeable batteries because other battery types may explode and burst.
- Do not work in the vicinity of lead-acid batteries. Batteries generate explosive gases during normal operation. See note below.

Failure to follow these instructions will result in death or serious injury.

NOTE: Follow these instructions and those published by the battery manufacturer and the manufacturer of any equipment you intend to use in the vicinity of the battery. Review cautionary markings on these products and on the engine.

⚠ WARNING

PERSONAL INJURY HAZARD

This battery charger is not intended for use by persons (including children) with reduced physical, sensory, or mental capabilities or lack of experience and knowledge, unless they have been given supervision or instruction concerning use of the appliance by a person responsible for their safety. Children should be supervised to ensure that they do not play with the battery charger.

Failure to follow these instructions can result in death or serious injury.

Precautions When Working With Batteries

⚠ WARNING

BURN FROM HIGH SHORT-CIRCUIT CURRENT, FIRE AND EXPLOSION FROM VENTED GASES HAZARDS

- Always wear proper, non-absorbent gloves, complete eye protection, and clothing protection. Avoid touching your eyes and wiping your forehead while working near batteries. See note #4.
- Remove all personal metal items, like rings, bracelets, and watches when working with batteries. See notes #5 and #6.
- Never smoke or allow a spark or flame near the engine or batteries.
- Never charge a frozen battery.

Failure to follow these instructions can result in death or serious injury.

NOTES:

1. Locate the Truecharge2 Series Battery Charger unit away from batteries in a well ventilated compartment.
2. Always have someone within range of your voice or close enough to come to your aid when you work near a lead-acid battery.
3. Always have plenty of fresh water and soap nearby in case battery acid contacts skin, clothing, or eyes.
4. If battery acid contacts skin or clothing, wash immediately with soap and water. If acid enters your eye, immediately flood it with running cold water for at least twenty minutes and get medical attention immediately.

5. Use extra caution to reduce the risk or dropping a metal tool on the battery. It could spark or short circuit the battery or other electrical parts and could cause an explosion.
6. Batteries can produce a short circuit current high enough to weld a ring or metal bracelet or the like to the battery terminal, causing a severe burn.
7. When removing a battery, always remove the negative terminal from the battery first for systems with grounded negative. If it is grounded positive, remove the positive terminal first. Make sure all loads connected to the battery and all accessories are off so you don't cause an arc.

Precautions When Preparing to Charge

⚠ WARNING

EXPOSURE TO CHEMICALS AND GASES HAZARD

- Make sure the area around the battery is well ventilated.
- Make sure the voltage of the batteries matches the output voltage of the battery charger.
- Be careful to keep corrosion from coming into contact with your eyes and skin when cleaning battery terminals.

Failure to follow these instructions can result in death or serious injury.

NOTES:

1. Study and follow all of the battery manufacturer's specific precautions, such as removing or not removing cell caps while charging, whether equalization is acceptable for your battery, and recommended rates of charge.
2. For flooded non-sealed batteries, add distilled water in each cell until battery acid reaches the level specified by the battery manufacturer. This helps to purge excessive gas from cells. Do not overfill. For a battery without removable cell caps, carefully follow manufacturer's instructions.

Precautions When Placing the Battery Charger

NOTICE
RISK OF DAMAGE TO THE BATTERY CHARGER • Never allow battery acid to drip on the battery charger when reading gravity, or filling battery. • Never place the Truecharge2 Series Battery Charger unit directly above batteries; gases from a battery will corrode and damage the charger. • Do not place a battery on top of the battery charger. **Failure to follow these instructions can damage the unit and/or damage other equipment.**

NOTE: For North American marine installations, external connections to the charger shall comply with the United States Coast Guard Electrical Regulations (33CFR183, Sub Part I) and ABYC standards E-11 and A-31.

For Australia / New Zealand installations, external electrical connections to the charger shall comply with Local Authority Regulations and with AS/NZS 3000 requirements.

FCC Information to the User

This equipment has been tested and found to comply with the limits for a Class B digital device, pursuant to part 15 of the FCC Rules. These limits are designed to provide reasonable protection against harmful interference in a residential installation. This equipment generates, uses, and can radiate radio frequency energy and, if not installed and used in accordance with the instructions, may cause harmful interference to radio communications.

However, there is no guarantee that interference will not occur in a particular installation. If this equipment does cause harmful interference to radio or television reception, which can be determined by turning the equipment off and on, the user is encouraged to try to correct the interference by one or more of the following measures:

- Reorient or relocate the receiving antenna.
- Increase the separation between the equipment and receiver.
- Connect the equipment into an outlet on a circuit different from that to which the receiver is connected.
- Consult the dealer or an experienced radio/TV technician for help.

⚠ CAUTION
Unauthorized changes or modifications to the equipment could void the user's authority to operate the equipment.

End of Life Disposal

The Truecharge2 Series Battery Charger is designed with environmental awareness and sustainability in mind. At the end of its useful life, the Truecharge2 Series Battery Charger can be decommissioned and disassembled. Components which can be recycled must be recycled and those that cannot be recycled must be disposed of according to local, regional, or national environmental regulations.

Many of the electrical components used in the Truecharge2 Series Battery Charger are made of recyclable material like steel, copper, aluminum, and other alloys. These materials can be auctioned off to traditional scrap metal recycling companies who resell reusable scraps.

Electronic equipment such as the circuit boards, connectors, and fuses can be broken down and recycled by specialized recycling companies whose goal is to avoid having these components end up in the landfill.

For more information on disposal, contact Xantrex.

Contents

Important Safety Instructions iii
Introduction 1
Truecharge 2 Battery Charger Features 3
Preparing For Installation 8
Installing the Truecharge 2 Battery Charger 16
Installing a Parallel Configuration 25
Installing Batteries 27
Configuring the Truecharge2 Battery Charger 34
Charging Batteries 35
Equalizing Flooded Batteries 37
Transitioning the Charger to ON, Standby, or Disabled 40
Accessing Charger Information 41
Using A Generator As Source Power 46
Maintaining the Charger 47
Replacing the DC Output Fuse 48
Troubleshooting 50
Specifications 54

Introduction

This chapter describes the standard features of a Truecharge2 Battery Charger, as well as its protection features. It also provides information on the different parts of the Truecharge2 Battery Charger.

Truecharge2 Battery Charger

The Truecharge2 Battery Charger ships with the following items:

- one Truecharge2 Battery Charger unit,
- owner's guide,
- rubber boots for DC terminals,
- nuts and washers (M6) for DC terminals and ground stud,
- strain relief clamp for AC input cables[1],
- three crimp connectors for AC wiring[1].

NOTE: Keep the carton and packing material in case you need to return the Truecharge2 Battery Charger for servicing.

1.Not included with IEC models of Truecharge2 Battery Chargers.

Standard and Protection Features

The Truecharge2 Battery Charger provides the following standard features:

- up to three[2] full current rated outputs,
- battery monitoring functions,
- correct charging voltage for batteries when connected to almost any single phase AC power outlet in the world,
- low electromagnetic interference (EMI),
- automatic charge resumption, if required, after AC power interruption,
- programmable custom charge settings[3],
- fully discharged battery charging[4],
- ability to operate two Truecharge2 Battery Chargers in parallel mode with the use of the optional remote panel.

The Truecharge2 Battery Charger provides the following protection features:

- battery reverse polarity protection via user-replaceable output fuse(s),
- AC input out-of-range derating and shutdown,
- ambient over-temperature derating and shutdown,
- battery over-charging protection,

2.Each output can charge different batteries that either have the same chemistry or can tolerate the same charge sequence and voltage/current ratings.
3.The charger can be programmed with custom charge setpoints using PC interface. This programming can only be done using a special configuration tool operated by Xantrex or a designated OEM.
4.The charger can initiate charging a non-damaged but zero voltage battery.

- electronic current limiting provides protection against short circuit conditions on the charger's output,
- ignition-protected rating, enabling installation in engine spaces,
- isolated design,
- short circuit protection for the BTS and communication connector ports including protection from incorrectly inserting the remote panel communication cable plug into the BTS port and vice versa,
- drip-proof rubber boots for DC terminals for added moisture protection,
- IP-32 drip protection rating[1],

The following optional accessories are available for the Truecharge2 Battery Charger:

- an optional battery temperature sensor[2] (BTS) and
- an optional remote panel[3].

The optional Battery Temperature Sensor (BTS) provides these protection features:

- battery under-temperature charging protection preventing battery charging at -25 °C (-13 °F) or below,
- battery over-temperature charging protection preventing battery charging at 70 °C (158 °F) or higher, and
- charging voltage compensation based on the temperature of the battery the optional BTS is connected to.

The optional Remote Panel provides the following features:

- Can be mounted up to 15 meters (50 feet)[4] away for remote control and monitoring,
- maximum output current limiting for charging smaller capacity batteries or to lower the current drawn from the generator or AC source,
- ability to enable or disable the charger while AC power is connected,
- ability to display individual battery bank levels, and
- ability to operate two Truecharge2 Battery Chargers in parallel for increased output current capacity.

1.In two specific installation orientations–see "Mounting Orientations (Deck and Horizontal)" on page 11.
2.Part number: 808-0232-01
3.Part number: 808-8040-01

4.Remote panel comes standard with a 7.5-m (25-ft) cable. For longer [15-m (50-ft)] cable, order part number 31-6262-00

Truecharge 2 Battery Charger Features

This section describes the different parts of the Truecharge2 Battery Charger.

Front Panel

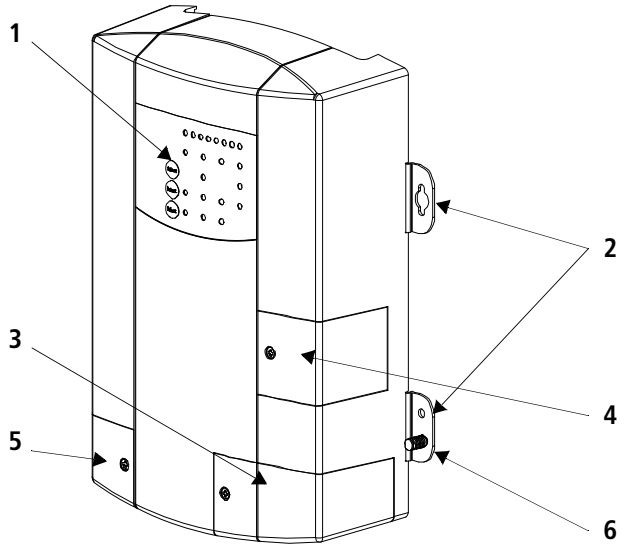

Figure 1 Truecharge2 Battery Charger Front Panel

Item	Description
1	**Onboard control and status display panel** or simply **onboard display** (see "Onboard Control and Status Display Panel" on page 5 for more information) for controlling the Truecharge2 Battery Charger settings and for monitoring charger status and charging current.
2	**Mounting flanges** are used to permanently install the product.
3	**DC wiring compartment cover** protects the DC terminals, as well as the communication and BTS ports. Remove and replace when installing cables.

⚠ DANGER

ELECTRICAL SHOCK HAZARD

Disconnect the batteries and AC power before opening the fuse access panel.

Failure to follow these instructions will result in death or serious injury.

4	**Fuse access panel cover** provides access to the DC fuse in the event of an accidental reverse battery polarity installation. Remove and replace the cover when replacing a fuse or fuses.

Item	Description
5	**AC wiring compartment** cover provides the installer with easy access to the AC wiring compartment, to allow for a trouble free installation. Remove and replace when installing the product.
6	**DC ground stud** for connecting the charger's chassis to ground.

Rear Panel

This section describes the parts of the rear panel of the Truecharge2 Battery Charger.

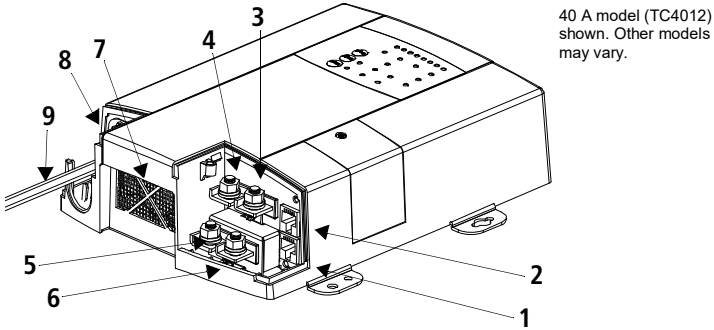

Figure 2 Truecharge2 Battery Charger Rear Panel

Item	Description
1	**BTS port**- battery temperature sensor port
2	**Communication port** - remote panel port
3	**Battery positive** (+) for bank 3 (6 mm stud)
4	**Battery positive** (+) for bank 2 (6 mm stud)
5	**Battery positive** (+) for bank 1 (6 mm stud)
6	**Battery negative** (–), common for all three banks (6 mm stud)
7	**Air vents** - located inside is the fan assembly
8	**AC wiring compartment**
9	**AC pigtail wiring** - line, neutral, and ground input wires

Onboard Control and Status Display Panel

This section describes the parts of the onboard control and status display panel of the Truecharge2 Battery Charger. See “Reading Onboard Display LEDs” on page 41 for more information.

IMPORTANT: To prevent any unintentional changes in the setting, Select panel buttons must be pressed and held down for three seconds to advance to the next selection.
To set and cancel an equalization program, press and hold for five seconds both the Charger Mode and Battery Temp. Select panel buttons.

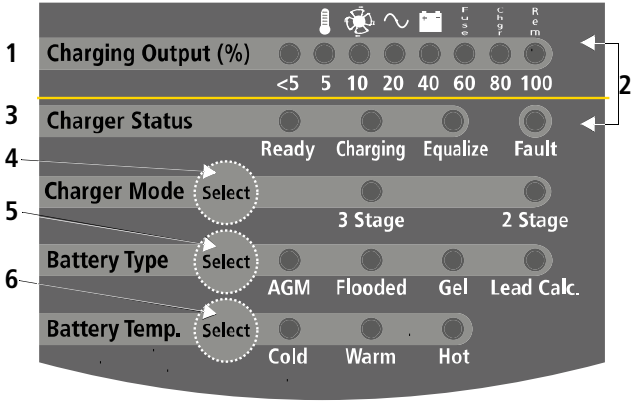

Figure 3 Onboard Control and Status Display Panel

To reduce current draw from the connected battery when AC power is not present, the panel’s LED control and status lights are automatically turned off and the buttons are disabled.

However, to temporarily check the status of the connected battery when AC power is not present, press the Status button on the optional remote panel.

Item	Description
1	Charging Output (%) LEDs • The LEDs illuminate like a bar graph displaying the present total output charge current as a percentage of the maximum rated charge current. For example, unit model TC4012 has a maximum rated charge current of 40 A so at 60% the charger’s current output is 24 A. The numbers below the LEDs represent the percentage values. See “Reading Onboard Display LEDs” on page 41. **NOTE:** When the maximum Charge Output current is limited via the optional remote panel, the LEDs will still display the total charge output current as a percentage of the maximum rated charge current and NOT as a percentage of the limited charge current. • One or two LEDs may flash intermittently in combination with a solid Fault LED (indicating a fault) or with a flashing Fault LED (indicating a warning). The icons above the LEDs represent the various types of fault and warning conditions. See “Reading Onboard Display LEDs” on page 41.

Item	Description
2	Fault LED The LED may illuminate a solid light (indicating a fault) or flash intermittently (indicating a warning) in combination with flashing Charging Output (%) LEDs. See “Interpreting Fault and Warning Indicators” on page 43 for details.
3	Charger Status LEDs Displays the current status of the charger. • **Ready** - a solid light indicates batteries are fully charged and the charger is in rest stage. • **Ready and Charging** - solid lights indicate batteries are fully charged and the charger is in float stage. • **Charging** - a solid light indicates charger is performing a normal charge cycle. • **Equalize** - a solid light indicates that the charger is performing an equalization cycle. - a flashing light indicates that the equalization cycle will begin after the absorption stage is done.

Item	Description

4	Charger Mode Select button
	• Press and hold the button for three seconds to select one of two settings. An indicator LED corresponds to each setting. Each setting optimizes the charging sequence differently in charging the batteries by stages.
	  • **Three-stage** - Bulk, Absorption, and Float; default setting
	  • **Two-stage** - Bulk and Absorption only
	• When setting or cancelling an Equalization program: Press and hold for five seconds both the Charger Mode and Battery Temp. Select buttons.

5	Battery Type Select button Press and hold the button for three seconds to select one of five settings. An indicator LED corresponds to each setting. **NOTE:** The fifth setting is a custom battery type setting and is indicated when all four LEDs illuminate. See “Custom” below. Each setting maximizes charger performance for its corresponding battery type. • **AGM** - Absorbent Glass Mat lead-acid battery • **Flooded** - Lead-acid battery; default setting • **GEL** - Gel-type lead-acid battery • **Lead Calc.** - Lead-calcium battery • **Custom** - Only available if a custom algorithm has been programmed by Xantrex or a designated OEM.

Item	Description
6	Battery Temp. Select button • Press and hold the button for three seconds to select one of three settings. An indicator LED corresponds to each setting. If an optional BTS is connected, the indicator LEDs represent real-time battery temperature. • When the optional BTS is not used, this selection changes the charger's output voltage settings to compensate for the battery temperature selected. The Cold setting raises the voltages, and the Hot setting lowers the voltages. See “Battery Temperature Compensation Levels” on page 32.

Item	Description
6 continued	• **Cold** - for battery temperature below 5 °C (41 °F); raises the charging voltage to compensate • **Warm** - for battery temperature between 5 and 30 °C (41 and 86 °F); default setting • **Hot** - for battery temperature above 30 °C (86 °F); lowers charging voltage to compensate • When setting or cancelling an Equalization program: Press and hold for five seconds both the Charger Mode and Battery Temp. Select buttons.

NOTICE

RISK OF BATTERY DAMAGE

Be sure the appropriate setting is selected before charging. For varying conditions, use the Warm setting.

Failure to follow these instructions can damage the unit and/or damage other equipment.

NOTICE

IMPROPER INSTALLATION BY AN UNQUALIFIED INSTALLER

The battery charger must be installed by a qualified installer in accordance with all applicable local or national installation codes. Examples of such codes are the US National Electrical Code (NFPA 70), the American Boat & Yacht Council standards E-11 and A-31, and the US Coast Guard Electrical Regulations (33CFR183).

Failure to follow these instructions can damage the unit and/or damage other equipment.

NOTE: The Truecharge2 Battery Charger is designed to be permanently mounted. Figure 4 shows a typical installation with three batteries, a battery temperature sensor (BTS) and a remote panel (both optional). It also shows the AC and DC wiring and protection devices required for a typical installation. Means of over-current protection and disconnection must be incorporated into the fixed wiring, in accordance with the electrical code that governs each installation.

IMPORTANT: Do not use the Negative bus to Truecharge2 Battery Charger chassis connection in Australia/New Zealand markets.

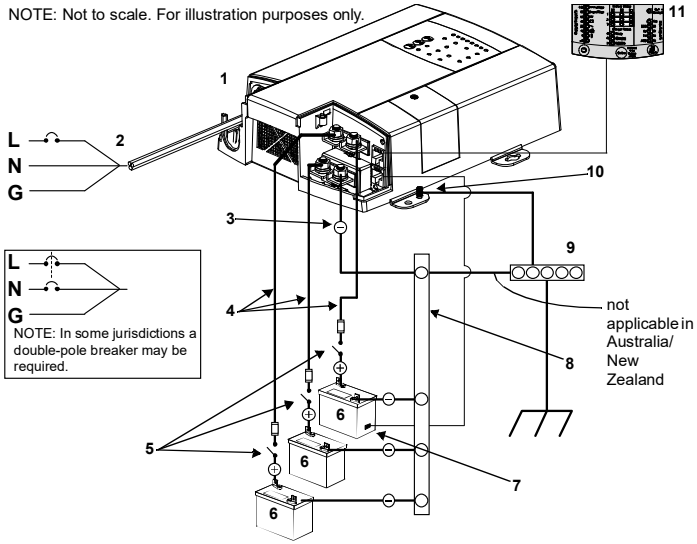

Figure 4 Configuration for Normal Loads

1	AC input wiring compartment
2	AC mains source protected by correct size and type of branch rated circuit breaker
3	DC negative cable

4	DC positive cables
5	DC circuit breakers or DC fused disconnects
6	Battery or battery bank
7	Battery Temp. Sensor (optional accessory part number: 808-0232-01)
8	Engine ground bus or DC negative bus
9	Ground bus
10	DC chassis ground (earth)
11	Remote panel (optional accessory part number: 808-8040-01)

Tools and Materials

To mount and connect the Truecharge2 Battery Charger you need the following tools:

- 10 mm socket wrench and extension for the DC terminals and ground stud,
- Phillips screwdriver for removing and re-securing the AC and DC wiring compartment covers,
- power drill/screwdriver,
- drill bit set for pilot holes for mounting screws (if using #6 mounting screws, use 1/16 drill),
- wire stripper,
- manufacturer's recommended crimp tool for any crimp terminals that are being used.

You need the following materials:

- 3 conductor AC input wiring
  Use the information in “Step 4: Installing AC Wiring” on page 21 and your local electrical codes to determine the correct wire and breaker or fuse.
- AC cable strain relief (if the one included is not compliant with your local electrical code requirements).
- appropriately sized DC cables for each battery, with suitable connectors at the battery end
  Use the information in “DC Wiring” on page 13 and your local electrical codes to determine the correct wire and breaker or fuse.
- appropriately sized DC chassis ground (earth) cable with suitable connectors,
- ring terminals to fit 6 mm (1/4 in.) studs at the charger end (Marine grade hardware is recommended),
- DC fused disconnect or properly rated circuit breaker for each battery bank,
- mounting screws, M3 or #6 marine grade, corrosion resistant (4 pieces) (Length dependent on mounting surface).

Location

Install the Truecharge2 Battery Charger in a location that meets the following requirements:

Condition	Requirement
Dry	The Truecharge2 Battery Charger must be installed in a dry location not subject to moisture especially rain, spray, or splashing bilge water.
Clean	The Truecharge2 Battery Charger should not be exposed to metal filings or any other form of contamination.
Cool	The ambient air temperature should be between 0 – 50 °C (32 – 122 °F) for best performance.
Ventilated	There must be at least 10 cm (4 in.) of clearance on the top and bottom ends of the Truecharge2 Battery Charger for air flow and at least 6 cm (2.5 in.) of clearance on either side (see Figure 7). Ventilation openings on the charger must not be obstructed. If the charger is mounted in a tight fitting compartment, the compartment must be ventilated with cut-outs to prevent the charger from overheating.
Safe[a]	This battery charger (except IEC models[b]) is ignition-protected equipment, so it can be installed in areas containing gasoline tanks or fittings which require ignition-protected equipment. Nevertheless, Xantrex recommends that it is safest not to install any kind of electrical equipment including the Truecharge2 Battery Charger in these areas.
Close to batteries	The Truecharge2 Battery Charger should be installed as close as possible to the batteries, but not in the same compartment to prevent corrosion. Avoid excessive cable lengths and use the recommended wire sizes. Xantrex recommends installing with cables sized to achieve less than 3% voltage drop on battery cables under full load. This will maximize the performance of the charger.

a.Applicable to Non-IEC models only. See “Product Numbers” on page i.
b.See “Product Numbers” on page i.

⚠ DANGER

EXPLOSION HAZARD FOR IEC MODELS ONLY

Do not place the battery charger in machinery space or in areas containing gasoline tanks or fittings in which ignition-protected equipment is required.

Failure to follow these instructions will result in death or serious injury.

NOTES:

When planning to install the Truecharge2 Battery Charger, be sure that you consider the location and orientation carefully. The Truecharge2 Battery Charger is considered to have an IP rating of IP-32, if installed in either of two specific orientations [shown in Figure 5 (a) and (b)] and only if all

panel covers are attached and secured. This rating means that it meets standards to prevent dripping water from entering the enclosure, and causing shock hazard and damage to equipment.

The other possible mounting orientations [shown in Figure 6 (c) and (d)] will not prevent the entry of dripping water, and are not suitable for marine or other moist environments without the installation of additional drip protection. They are only acceptable for use in locations that are always dry.

The environment, therefore, will determine the mounting orientations that are suitable for each installation. Is the installation environment one that will always be dry or will moisture or condensation sometimes enter the area?

⚠ DANGER

ELECTRICAL SHOCK HAZARD

In marine environments, there is a likelihood that condensation will be present, and may drip on to the charger. Use the appropriate mounting orientations as shown in Figure 5 and Figure 6.

Failure to follow these instructions will result in death or serious injury.

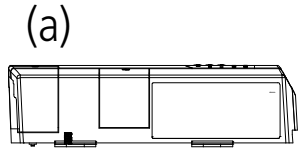

Deck Mount - this orientation meets IP-32 requirements and is drip-proof.

Horizontal Wall Mount (with AC wiring higher than DC terminals only) - this orientation meets IP-32 requirements and is drip-proof.

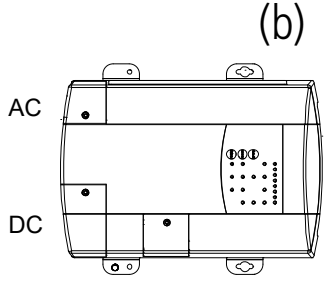

Figure 5 Mounting Orientations (Deck and Horizontal)

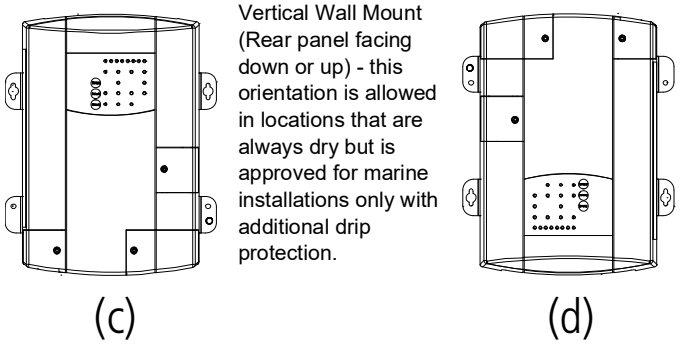

Figure 6 Mounting Orientations (Vertical)

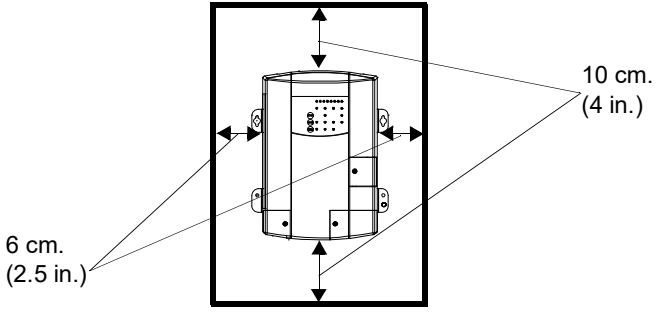

Figure 7 Ventilation Clearance

Wiring Requirements

⚠ DANGER

ELECTRICAL SHOCK AND FIRE HAZARD

Do not operate the battery charger with damaged or substandard wiring. Make sure that all wiring is in good condition and is not undersized. See notes below.

Failure to follow these instructions will result in death or serious injury.

NOTES:

- Wiring and fuse sizes are governed by electrical codes and standards. Different requirements apply in different countries and to different types of installations, for example, boat, home or RV. It is the responsibility of the installer to ensure that each installation complies with all applicable codes and standards.
- Ensure that wires and fuses or breakered disconnects are correctly sized. Maximum continuous DC current available from the charger may be an additional 6–10% above the nominal current rating of the charger.

DC Wiring

The following tables show some typical wire sizes for various cable length runs, based on 3% voltage drop on DC cables, 75 °C (167 °F) rated wire with wiring being inside the engine compartment – assumed ambient of 50 °C (122 °F).

Table 1 DC Wiring Examples for 12 V chargers[a]

Wire Length (max length one way)		Wire Size (AWG and mm²)		
feet	meters	TC2012	TC4012	TC6012
5	1.5	No. 10 (5.3 mm^2)	No. 8 (8.4 mm^2)	No. 6 (13.3 mm^2)
7.5	2.25	No. 10 (5.3 mm^2)	No. 6 (13.3 mm^2)	No. 4 (21.2 mm^2)
20	6	No. 6 (13.3 mm^2)	No. 2 (33.6 mm^2)	No. 1 (42.4 mm^2)

a. Values based on American Boat & Yacht Council E-11 2018 Table 6A and Table 9.

NOTE: In the event of a conflict between the voltage drop table (Table 9) and the ampacity table (Table 6A) use the larger wire size.

Table 2 DC Wiring Examples for 24 V chargers[a]

Wire Length (max length one way)		Wire Size (AWG and mm²)		
feet	meters	TC1024	TC2024	TC3024
5	1.5	No. 16 (1.3 mm^2)	No. 10 (5.3 mm^2)	No. 10 (5.3 mm^2)
7.5	2.25	No. 16 (1.3 mm^2)	No. 10 (5.3 mm^2)	No. 10 (5.3 mm^2)
20	6	No. 10 (5.3 mm^2)	No. 8 (8.4 mm^2)	No. 6 (13.3 mm^2)

a. Values based on American Boat & Yacht Council E-11 2018 Table 6A and Table 9.

NOTE: In the event of a conflict between the voltage drop table (Table 9) and the ampacity table (Table 6A) use the larger wire size.

Over-current Protection Disconnect

Electrical codes require the DC circuit from each battery to the charger to be equipped with a disconnect and an over-current protection device, usually within 7 inches (17.8 cm) of each battery[1]. The devices are usually DC-rated circuit breakers, fused disconnects, or a separate fuse and disconnect for each circuit. These devices must be rated for DC voltage and

1. Per American Boat & Yacht Council E-11.

current and be rated to withstand the short circuit current available from the connected battery bank. Do not substitute devices rated only for AC voltage; they may not operate properly.

The current rating of the DC fuses must be correctly matched to the size of the DC wiring used, in accordance with the applicable codes. This helps to protect the installation against fire in case of any overcurrent or short circuit fault.

Table 3 Fuse Sizes versus Wire Sizes Based on ABYC Regulations

AWG	Max. Fuse/Breaker
14	15 A
12	20 A
10	30 A
8	50 A
6	80 A
4	100 A
2	125 A
1	150 A

DC Chassis Ground

The DC chassis ground (earth) wire should also be sized correctly to provide proper protection. Refer to the local electrical codes for your specific installation to determine the correct gauge. The ABYC standards require this DC chassis ground wire to be the same size as the largest DC + and – conductors connected to the charger, or no more than one wire size smaller. See “Step 2: Connecting the DC Chassis Ground (Earth)” on page 17 for instructions.

AC Wiring

⚠ DANGER

FIRE HAZARD

Use only on circuits provided with 20A maximum branch circuit protection in accordance with National Electrical Code, NFPA 70.

Failure to follow these instructions will result in death or serious injury.

The AC wiring must be of sufficient size, and it must be protected by the appropriate size and type of input breaker, based on the jurisdiction and application. Some basic examples are given below.

The AC input wiring for the Truecharge2 Battery Charger should be three-conductor cable, providing a line, neutral, and ground conductor (or L, N, GND) in an outer jacket, rated a minimum of 75C, and sized based on the AC input current to the charger (see “AC Input Specifications” on page 54) and on the value of overcurrent protection provided.

For example:

- in US NEC, you may use a 14 AWG wire with a 15 A breaker for up to 12 A continuous current (or 12 AWG for a 20 A breaker for up to 16 A continuous current) or
- for 230 Vac application, you may be able to use either a 2.5mm^2 wire with a 16 A breaker or use 1.5 mm^2 wire with a 10 A breaker.

Note that every jurisdiction will have different requirements as will each application, so research the regulations for your local jurisdiction to determine which wire size and type is correct based on the maximum AC input current marked on the chargers and given in “AC Input Specifications” on page 54.

Other examples of AC wiring requirements:

- For marine applications, the American Boat & Yacht Council (ABYC) requires stranded wire, which is more robust than solid wire when exposed to vibration.
- For RV applications, the United States National Electrical Code (NEC) allows solid wire in multi-conductor cable, however, stranded wire is also acceptable which will withstand vibration better.

The AC wiring supplying the Truecharge2 Battery Charger must be protected by the correct size and type of branch-circuit rated fuse or breaker to meet the applicable installation codes. If a fuse is used instead of a breaker, a correctly rated disconnect switch is required ahead of the fuse so that power can be turned off, allowing fuse replacement and safe maintenance of other equipment on the mains circuit.

Battery Bank Size Requirements

The Truecharge2 Battery Charger is designed to work with a minimum battery bank size. Each bank should meet the minimum Ah rating shown in Table 4. These minimum values are based on twice the charger’s rated maximum charging current. For example, a 20-amp charger will charge a minimum 40 Ah battery. If you are considering new batteries, please consult the battery’s manufacturer for their recommendation based on the maximum charging current of your charger.

IMPORTANT: If the battery manufacturer has specified the maximum charge current, please follow their recommendation.

Table 4 Minimum Battery Bank Size

12 Vdc Models	Minimum Battery Bank Size (Ah)
TC2012	40
TC4012	80
TC6012	120
24 Vdc Models	Minimum Battery Bank Size (Ah)
TC1024	20
TC2024	40
TC3024	60

Installing the Truecharge 2 Battery Charger

Be sure to read the safety guidelines and pay attention to all cautions and warnings throughout the installation procedure. The installer is responsible for ensuring compliance with the installation codes for your particular application. See CAUTION statement under “Preparing For Installation” on page 8.

⚠ DANGER

ELECTRICAL SHOCK HAZARD

Disconnect all sources of AC and DC power before proceeding.

Failure to follow these instructions will result in death or serious injury.

Installation Sequence

To make charger installation quick and easy, Xantrex recommends that the installation tasks be performed in the following sequence:

1. Mount the charger in position.
2. Connect the DC ground.
3. Install DC wiring including installing required disconnects, fuses, or breakers.
4. Install AC wiring including earth grounds.
5. Power up the charger.

Step 1: Mounting the Battery Charger

Mount the Truecharge2 Battery Charger using all four mounting slots and holes which are provided. Mounting orientations a) and b) in Figure 5 meet IP-32 and drip-proof requirements that are needed to ensure safety in the presence of condensation. The other possible mounting orientations c) and d) shown in Figure 6 will not prevent the entry of dripping water, and are not suitable for use in marine installations or other moist environments without the installation of additional drip protection. They are only acceptable for use in locations that are always dry.

To mount the Truecharge2 Battery Charger:

1. Select a mounting surface that is flat and allows for a minimum of 10 cm (4 in.) of clearance on the top and bottom ends for air flow and at least 6 cm (2.5 in.) of clearance on either sides (see Figure 7, “Ventilation Clearance” on page 12).
2. Drill the four pilot holes for the mounting screws, taking care that there is nothing behind the surface that can be damaged by the drill.
3. Mount the Truecharge2 Battery Charger using corrosion resistant, #6 (3 mm) round, pan head (or similar) screws.
   The top two keyhole-style mounting holes can be used to hold the Truecharge2 Battery Charger in place while fastening the bottom two screws. For secure, permanent mounting, use the holes in all four mounting flanges and fasten all four screws. Do not rely on screws only in the keyhole slots for the installation of the charger.

Step 2: Connecting the DC Chassis Ground (Earth)

⚠ WARNING

ELECTRICAL SHOCK HAZARD

Improper connection can result in risk of electric shock. See note below.

Failure to follow these instructions can result in death or serious injury.

NOTE: Have an electrician install a properly grounded circuit if one is not available.

The Truecharge2 Battery Charger must be connected to a grounded, metal, permanent wiring system, or an equipment-grounding conductor should be run with the circuit conductors and connected to the equipment-grounding lead on the charger. Connections to the battery charger must comply with all local and application-specific codes and ordinances.

Xantrex recommends that you install a DC chassis ground (earth) wire from the ground stud on the Truecharge2 Battery Charger to the engine bus or DC ground bus. The DC chassis ground (earth) wire should be sized correctly with the power conductors, and both must be sized for the battery fuses that are used to protect the DC wiring. Refer to your local electrical codes to verify the requirements in your jurisdiction for your application.

To connect the DC chassis ground (earth):

1. Locate the ground stud on the Truecharge2 Battery Charger.
2. Connect the DC chassis ground (earth) from the ground stud to the ground bus. See Figure 4, “Configuration for Normal Loads” on page 8.
   Use a flat washer, a lock washer and a nut (included in the installation kit) to secure the connection.
3. Tighten the nuts to 2.3 N-m (20 lb-in.) torque and test that the wire is secure. Do not over-tighten as this may result in damage to the charger.

Step 3: Installing DC Wiring

The procedure for installing the DC wiring applies to a single battery, as well as multiple batteries or battery banks.

⚠ WARNING

ACCIDENTAL SHORT OR SPARK HAZARD

Leave the DC disconnects or breakers in the Off position or DC fuses removed from their fuse holders until installation is complete.

Failure to follow these instructions can result in death or serious injury.

1. Remove the DC compartment cover. See “Front Panel” on page 3.
2. Plan the route that the DC wires will follow, keeping it as short as possible. Measure and cut the required wire length, after allowing some extra length for connections and to provide slack in the wires for strain relief.
3. Identify the positive wires, by using color-coded wire, or by marking both ends of the wire with colored tape, or similar kind of marking. Repeat with a different color for the negative. Most installation codes recommend coloring the positive red and the negative black.

IMPORTANT: You may find it helpful to label each cable, associating it with the battery bank it is connected to. For example, bank 1 (–), bank 1 (+), bank 2 (–), and so on.

4. Install a DC circuit breaker or fused disconnect in each positive cable that is as close to the battery positive terminal as possible. Consult your local electrical codes regarding the distance allowed between the battery and the fuse or breaker. For example, for most situations ABYC standard E-11 requires no more than 7 inches (17.8 cm). Be sure the breaker or fused disconnect is open.
5. Route the wiring to the batteries and to the Truecharge2 Battery Charger. Avoid routing wiring through an electrical distribution panel, battery isolator, or other device that will add voltage drops.

⚠ WARNING

SHOCK HAZARD

The rubber boots must be installed over the Truecharge2 Battery Charger DC terminals to keep water off of live parts and to maintain the chargers' IP-32 and drip-proof ratings.

Failure to follow these instructions can result in death or serious injury.

6. Insert and slide the rubber boot(s) over the charger end of the DC battery cables.

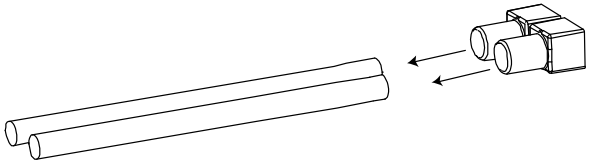

7. Install crimp lugs on the charger end of the DC battery cables using the crimp manufacturer's instructions and tool.

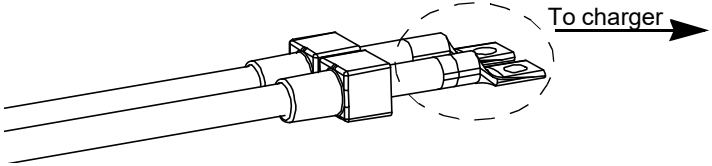

NOTICE

REVERSE POLARITY DAMAGE

Before proceeding to the next step, carefully check the wiring polarity. Do not reverse the connections. See note below.

Failure to follow these instructions can damage the unit and/or damage other equipment.

NOTE: Make sure the positive terminals of the Truecharge2 Battery Charger will be connected to the correct terminals of the battery (fuses or breakers) and from there to the positive terminals of the battery. Make sure the negative terminal of the Truecharge2 Battery Charger will be connected to the battery negative terminal (or DC negative bus).

8. Connect the negative cable to the negative DC terminal on the charger. See Figure 4, "Configuration for Normal Loads" on page 8.

For one battery or bank

Connect the negative cable from the negative terminal on the battery to the negative DC terminal on the Truecharge2 Battery Charger.
Use a flat washer, a lock washer and a nut (five of each included in the installation kit) to secure the connection.

For more than one battery or bank

Connect the negative cable from the negative terminal on the negative ground bar or bus to the negative DC terminal on the Truecharge2 Battery Charger.
Use a flat washer, a lock washer and a nut (five of each included in the installation kit) to secure the connection.

9. Tighten the nuts to 2.3 N-m (20 lb-in.) torque and test that the wire is secure. Do not over-tighten as this may result in damage to the charger.
10. Connect each positive cable to the correct positive DC terminal on the Truecharge2 Battery Charger.
    Use a flat washer, a lock washer and a nut (five of each included in the installation kit) to secure the connection.
11. Tighten the nuts to 2.3 N-m (20 lb-in.) torque and test that the wire is secure.
12. Connect the free end of each positive cable assembly to the correct positive terminal of the battery, using sufficient torque as recommended by your battery manufacturer.
13. Connect the free end of the negative cable to the negative terminal on the battery, using sufficient torque as recommended by your battery manufacturer.

NOTE: If you are using more than one battery, you will need to connect the negative cable from each of the batteries to the negative ground bar or bus. The negative ground bar or bus will then have a single negative cable connecting to the negative charger terminal.

14. Secure cables in place using tie-wraps or cable straps according to electrical codes.
15. Slide the rubber boots to cover the DC terminals.

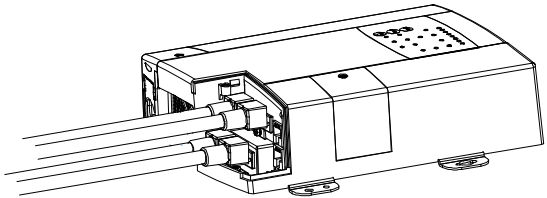

16. If available, route the optional battery temperature sensor (BTS) from the battery (one which is located in the warmest ambient temperature) to the charger location.
17. Proceed to “Step 4: Installing AC Wiring”.

Step 4: Installing AC Wiring

Before connecting AC wiring, make sure the AC source circuit is protected by a breaker switch of the correct size and type, to comply with the electrical code for your location and application. The current rating of the input breaker should not be larger than 20 A for 120 Vac applications and 16 A for 230 Vac applications, but may be required to be lower depending on the wire size used.

⚠ DANGER

ELECTRICAL SHOCK HAZARD

Disconnect the AC source by turning off the breaker feeding the circuit, unplugging from shore power and disconnecting any other power sources (such as a generator).

Failure to follow these instructions will result in death or serious injury.

1. Plan the route that the AC supply wiring will follow from the source (usually an AC distribution panel) to the Truecharge2 Battery Charger.
2. Measure and cut the required length of three-conductor (L, N, GND) cable allowing some extra length for connections and providing some slack.
3. Route the AC supply wiring from the charger (in its mounted position) to the source.
4. Unscrew the wiring compartment cover from the left rear of the Truecharge2 Battery Charger to expose the AC wiring access hole and charger's AC pigtail leads.

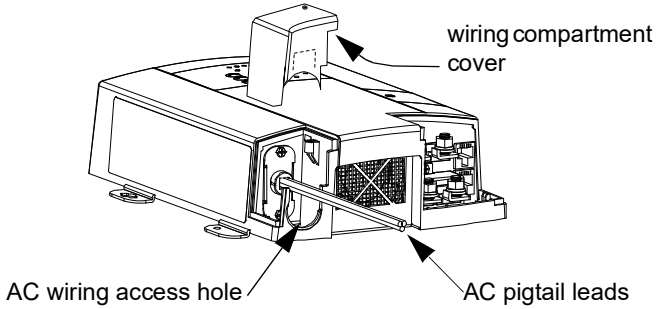

5. Carefully remove 50 – 75 mm (2 – 3 in.) of the outer jacket from the AC supply wiring, being careful not to cut or nick the insulation on the individual conductors.
6. Extend the charger's AC (L, N, GND) pigtail leads (wires) from the AC wiring compartment of the charger.

7. Feed the AC supply wiring through the wider end of strain relief and out the tapered end.

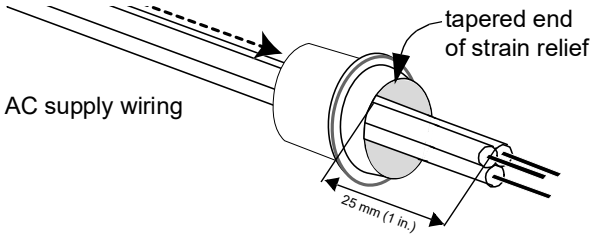

8. Slide the strain relief on the jacket of the wiring (not on the individual conductors) approximately 25 mm (1 in.) from the end of the jacket.
9. Connect the AC supply wires to the Truecharge2 Battery Charger pigtail wires.
   NOTE: Connect the line conductor to the AC line, the neutral to the AC neutral, and the ground to the AC ground. The wires are color coded as follows:

Conductor	Charger Pigtail Color Code	AC Supply Wire Color Code
Line	Black	Black (or brown)
Neutral	White	White (or light blue)
Ground	Green with yellow stripe	Green with yellow stripe

To connect AC wires with the provided crimp-on butt-splice connector:

a) Make the connections using the provided crimp-on connectors[1] or with other approved connectors required by your code, and suitable for your installation.

For example, the ABYC Standards and Recommended Practices for Small Craft prohibit twist-on connectors for AC connections on a boat. For other types of installation, refer to your applicable code.

⚠ DANGER

FIRE HAZARD

Improperly connected wires may overheat. Exercise care when using any crimp connector, use the tool specified by the crimp connector manufacturer, and follow all crimping instructions.

Failure to follow these instructions will result in death or serious injury.

b) Using a wire stripper, carefully strip 8 mm (5/16 in.) from the ends of the two wires being connected.

1.Provided butt-splice connector (catalog number BNYF2) is available from www.ksterminals.com.

c) Insert one wire into one end of the butt-splice, until the insulation hits the internal metal crimp section, insert the butt-splice into the crimper[1], and crimp firmly. The proper location for the crimp is approximately 1.6 mm (1/16 in.) past where the butt-splice insulation tapers down as shown.

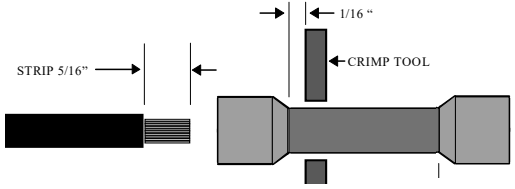

d) Repeat Step c for the other end of the butt-splice.

10. When all connections are completed, push the wiring and connectors inside the AC wiring compartment.
11. Place the strain relief on the AC wiring access hole.
12. Install the wiring compartment cover to fasten the strain relief and tighten the screw on top to secure the cover. Do not over-tighten.

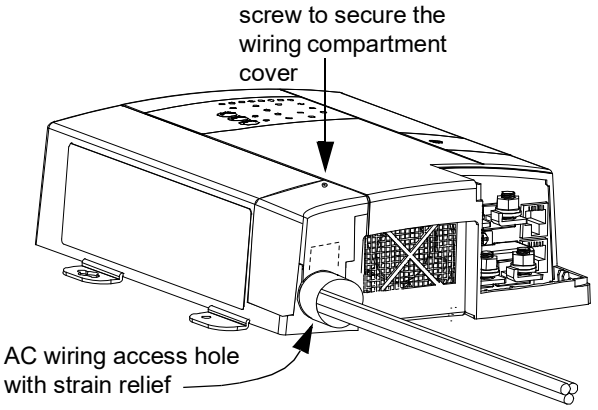

13. If applicable, install the optional remote panel.
14. Connect the AC supply wiring from the charger to the AC panel feeding the charger.
15. Connect the line conductor to the breaker, the neutral to the neutral bus, and the ground to the ground bus.
16. Secure cables in place using tie-wraps or cable straps according to electrical codes.

1.Use crimper (product number CT-160) from www.panduit.com.

Step 5: Powering Up

Make one last check that all connections are correct and secure.

The Truecharge2 Battery Charger charger may now be powered up.

1. Close the DC disconnect switch or breaker.

⚠ DANGER

EXPLOSION AND/OR FIRE HAZARD

The final connection of the DC battery circuit will generate an arc. Ensure all areas of the system, including batteries and engine compartments, are well ventilated prior to making this connection.

Failure to follow these instructions will result in death or serious injury.

2. Switch the AC power on at the source breaker. It is normal to see a seven to ten second delay while the charger powers up. During this time, the indicator LEDs on the onboard display and the remote panel will illuminate for a second (power on test) before reporting charging and battery status information.

   NOTE: Battery qualification may not be correctly performed if AC power is switched on first.

   NOTE: The onboard display LEDs will also illuminate momentarily with DC power alone when DC power is applied and the minimum battery voltage (i.e., the connected batteries) is above 9 V.

Installing a Parallel Configuration

A parallel configuration is when two Truecharge2 Battery Chargers are coupled together to increase the output capacity. For example, a 40-amp Truecharge2 Battery Charger can be connected with another 40-amp Truecharge2 Battery Charger for a combined 80-amp capacity charger. This configuration is possible only with the use of the optional remote panel.

NOTICE

DAMAGE TO THE BATTERY CHARGER

Do not parallel Truecharge2 Battery Chargers together without a Truecharge2 Remote Panel (part number: 808-8040-01).

Failure to follow these instructions can damage the unit and/or damage other equipment.

Parallel configuration can only be done when the following conditions are met:

- Two Truecharge2 Battery Chargers must have the same output voltage rating. Never parallel a 24-volt charger with a 12-volt charger.
- Both Truecharge2 Battery Chargers must connect to a Truecharge2 Remote Panel.
- Both Truecharge2 Battery Chargers must be correctly installed.

Installing a parallel configuration:

1. Follow the installation sequence (from steps 1 through 4) for a single unit - “Installing the Truecharge 2 Battery Charger” on page 16.
2. In “Step 4: Installing AC Wiring” on page 21, make sure that the two AC input lines come from the same circuit branch, that is, both AC input lines should have a common circuit breaker.
3. Designate a primary charger and a secondary charger between the two chargers. Remember that only the primary charger or remote panel can be used to configure and operate the parallel system.
4. Connect the primary charger’s battery bank 1 to the secondary charger’s battery bank 1. Do the same for battery banks 2 and 3.
   NOTE: A maximum of three battery banks can be connected to a parallel-configured charger system.
5. Leave any unused DC output/s unconnected.
6. Connect the remote panel’s communications cable to the primary charger’s remote port and to the remote panel’s primary port. Do the same for the secondary charger.
7. Connect the BTS (or battery temperature sensor’s) cable plug to the primary charger’s BTS port. Then connect the BTS’s sensor to the battery.
   NOTE: If you have two BTSs, you may connect the two separate cable plugs to each of the battery chargers’ BTS ports. You may then connect each of the sensors to two separate batteries. However, during operation, the BTS that is detecting a higher temperature will be used for battery temperature compensation.

Powering up after installing a parallel configuration:

1. Follow the procedures in “Step 5: Powering Up” on page 24.
2. Observe that the Parallel LED on the remote panel lights up to indicate that two chargers are in parallel configuration charging mode.

During Charging

The two Truecharge2 Battery Chargers’ output currents are synchronized during most of the charging cycle. When a battery is approaching a fully charged state, it is normal to see one charger’s output current drop down earlier than the other charger. The output current displayed via the remote panel lights is the sum of both chargers’ output currents divided by the total maximum current ratings of both chargers.

When Configuring the Battery Chargers

The secondary charger’s configurations are automatically synchronized with the primary charger. The configuration can be performed from either the remote panel or the primary charger’s onboard display. Follow the exact same procedures as a single charger when configuring the paralleled chargers.

When Equalizing Batteries

Equalization can be programmed and cancelled through the remote panel. Equalization can be cancelled through both charger’s onboard display.

Fault and Warning Conditions

- When one charger encounters a fault condition, the other charger remains charging but the remote panel will stop synchronizing the two chargers’ settings at this point. The remote panel will display the fault condition via Fault/Warning LED the same way as the “faulty” charger displays it on its onboard display.
- Remote panel’s Fault/Warning LED only clears when fault or warning conditions at both chargers are cleared. The remote panel will resume synchronizing the two chargers’ settings at this point.

Exiting parallel operation:

Once the remote panel enters parallel operation, the only way to exit out of it is to completely power down the remote panel by unplugging both of the communication cables.

Installing Batteries

Battery installation should always be treated like a brand new installation. This means, that all safety and precautionary guidelines that were followed prior and during the installation of the battery charger, must again be followed in order to avoid risks of electrical shock, injury, or death.

⚠ DANGER

ELECTRICAL SHOCK HAZARD

Disconnect both AC and DC power from the battery charger before attempting before replacing old or defective batteries and even installing new batteries.

Failure to follow these instructions will result in death or serious injury.

To replace an old battery:

1. Turn off the AC source by disconnecting the AC line and/or opening the AC source disconnect.
2. Switch off all devices operating from currently installed batteries.
3. Disconnect the battery cables from the old battery.
   NOTE: For Negative chassis systems, disconnect the negative cable first, then the positive cable.
   For Positive chassis systems, disconnect the positive cable first, then the negative cable.
   Inspect all AC and DC cables for damage and repair, if necessary.
4. Replace the old battery with the new battery.
5. Reconnect the battery cables to the new battery.
   NOTE: For Negative chassis systems, reconnect the positive cable first, then the negative cable.
   For Positive chassis systems, reconnect the negative cable first, then the positive cable.

IMPORTANT: If the new battery is different from the old one in chemistry, temperature, or size, remember to re-configure the battery settings accordingly. See “Setting the Battery Temperature without a BTS” on page 32 and “Configuring the Battery Bank Type” on page 34.

Input Voltage Operating and Derating

When AC input is within the lower range between 90–108 Vac, the Truecharge2 Battery Charger derates to 80% of maximum current.

However, when AC input increases above 108 Vac up to 265 Vac, maximum current returns to 100% capacity. Furthermore, the Truecharge2 Battery Charger will continue to operate at 100% of maximum current.

Multi-Stage Charging

Most Truecharge2 Battery Charger models have three outputs that share the full rated current enabling it to charge three different batteries or battery banks that either have the same chemistry or can tolerate the same charge sequence and thresholds. The Truecharge2 Battery Charger can perform either three-stage charging (Bulk, Absorption, and Float) or two-stage charging (Bulk and Absorption).

IMPORTANT: The battery banks are not galvanically isolated from each other. They share a common negative as shown in the diagram below. The negative bus to chassis connection as shown below may not be suitable in some applications.

IMPORTANT: Do not use the Negative bus to Truecharge2 Battery Charger chassis connection in Australia/New Zealand markets.

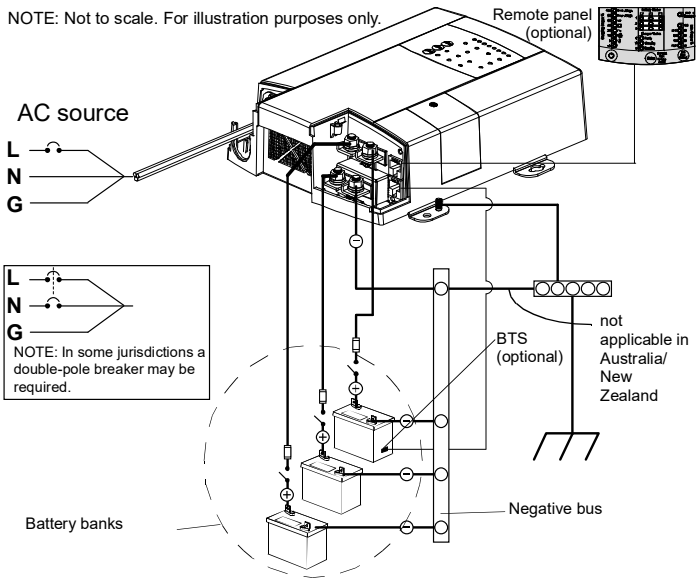

Figure 8 Typical Three-Battery Installation

Three-Stage Charging

The three-stage charging mode employs the following sequence: ***Bulk, Absorption, and Float***. During the Bulk stage the batteries are accepting a constant maximum current. In the Absorption stage, the battery voltage is held constant and the current declines. A battery will “gas” (produce hydrogen and oxygen) when its voltage exceeds the “gassing” voltage. Finally, in the Float stage, the charger continues to provide voltage at a lower level to maintain the battery in a fully charged state. If there is no load on the battery, it will typically draw very little current. The charger, however, is able to provide current to its full rating to power auxiliary DC loads on the battery.

The charger will restart the charging cycle in the Bulk stage if the lowest battery voltage of the three banks drops below 12.5 V (12 Vdc chargers) or 25 V (24 Vdc chargers) for 15 minutes. After seven days, the charger will automatically restart charging in order to refresh the batteries.

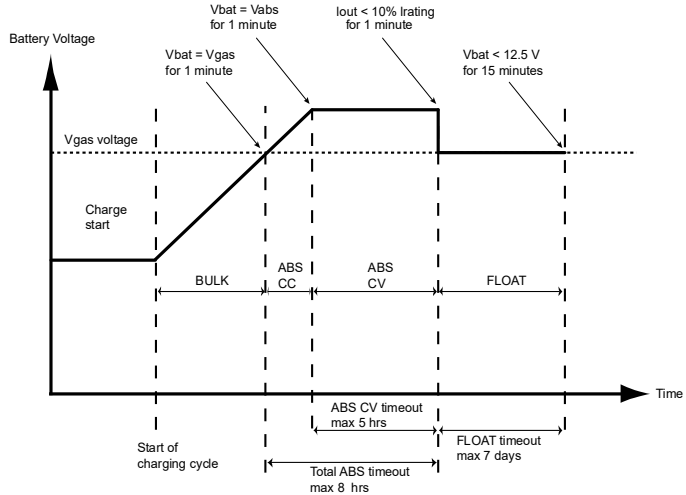

Figure 9 Three-Stage Charging Process

Two-Stage Charging

The two-stage charging mode employs the following sequence: *Bulk and Absorption*. It runs similar to the three-stage sequence except that there is no float stage; after the absorption stage the charger stops providing current to the battery and the charger output drops to 9 V (12 Vdc chargers) or 18V (24 Vdc chargers). In this manner, DC loads draw power supplied by batteries and the charger enters a “rest or standby stage.” Like the three-stage sequence, the charger will restart the charging cycle in the Bulk stage if the lowest battery voltage of the three banks drops below 12.5 V (12 Vdc chargers) or 25 V (24 Vdc chargers) for 15 minutes. After seven days, the charger will automatically restart charging in order to refresh the batteries.

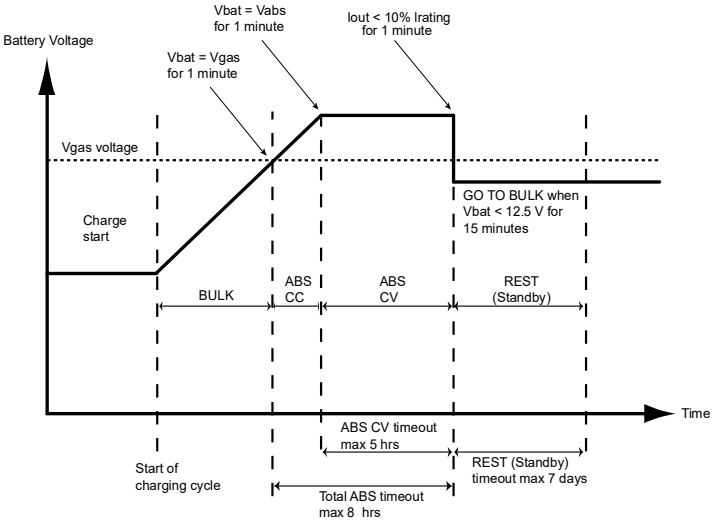

Figure 10 Two-Stage Charging Process

Charging Voltage Setpoints

The Truecharge2 Battery Charger charging process is designed to make the battery or battery banks reach the following voltage setpoints.

Table 5 Charging Maximum Voltages for 12-volt chargers

Battery Type	Absorption (Volts)	Float (Volts)	Equalization (Volts)
Flooded	14.4	13.5	16.0
GEL	14.2	13.8	not applicable
AGM	14.3	13.4	not applicable
Lead-Calcium	15.5	13.5	16.0

Table 6 Charging Maximum Voltages for 24-volt chargers

Battery Type	Absorption (Volts)	Float (Volts)	Equalization (Volts)
Flooded	28.8	27.0	32.0
GEL	28.4	27.6	not applicable
AGM	28.6	26.8	not applicable
Lead-Calcium	31.0	27.0	32.0

Battery Qualification

The Truecharge2 Battery Charger will perform a battery qualification on each application of AC (or DC > 9 V [for 12-volt batteries]; DC > 18 V [for 24-volt batteries]), to determine if battery banks are present and healthy.

To force a battery detection sequence,

1. Turn off AC and DC.
2. Wait approximately 20 seconds or until all lights on the charger or remote have gone out.
3. Turn on DC.
4. Turn on AC.
   The charger will then perform a battery detection.

The Truecharge2 Battery Charger charges all banks at the same time but the bank in most need of charging is the one that receives the most charge. For example, if Bank 1 and Bank 2 are both charged, but Bank 1 has a load and Bank 2 does not, then the charger may rarely charge Bank 2.

Temperature Considerations

Xantrex strongly recommends that you purchase and install the optional Battery Temperature Sensor (BTS) to protect your battery and improve charging accuracy. Attach the BTS to the warmest battery.

If no BTS is connected, the charger defaults to the Battery Temp. selection on the onboard display as well as on the optional remote panel.

Setting the Battery Temperature without a BTS

NOTICE

RISK OF BATTERY DAMAGE

Do not set a battery temperature that is lower than the actual temperature in the absence of a BTS as this may cause the battery to be overcharged. Similarly, do not set a battery temperature that is higher than the actual temperature in the absence of a BTS as this may result in under-charging the battery.

Failure to follow these instructions can damage the unit and/or damage other equipment.

NOTE: Always be aware of the temperature setting, observe the battery's actual temperature and adjust the Battery Temperature setting accordingly. For varying conditions, use the Warm setting.

To configure the battery temperature:

NOTE: By default, the Battery Temp. is set to Warm.

1. Press and hold the Battery Temp. Select button for three seconds to advance to the next setting.
2. Select the appropriate battery temperature setting.
   The LEDs will indicate which of the three types is being selected: Warm, Hot, or Cold.

NOTE: Cold is for battery temperature below 5 °C (41 °F). Warm (default setting) is for battery temperature between 5 and 30 °C (41 and 86 °F). Hot is for battery temperature above 30 °C (86 °F). See Table 7, "Battery Temperature Compensation Levels" on page 32 to see how output voltage is offset by varying the temperature selection.

Table 7 Battery Temperature Compensation Levels

Temperature Selection	Recommended for battery temperature of:	Voltage added for temperature compensation offset from 25 °C	
Cold	below 5 °C (41 °F)	Flooded/PbCa/Gel	0.675
		AGM	0.525
Warm	between 5 and 30 °C (41 and 86 °F)	Flooded/PbCa/Gel	0
		AGM	0
Hot	above 30 °C (86 °F)	Flooded/PbCa/Gel	-0.27
		AGM	-0.21

Operating DC Loads

When the Truecharge™ 2 Battery Charger is operating, DC loads such as fans and lights may vary in speed or intensity. This is normal. The Truecharge™ 2 Battery Charger will not harm any load connected to it as long as the load can withstand the following maximum voltages:

- 16 V for 12-volt chargers,
- 32 V for 24-volt chargers.

Configuring the Truecharge2 Battery Charger

Once the charger is connected to at least one battery bank and to AC, it is live and it may be configured. The indicator LEDs on the onboard display will illuminate for a second (power on test) before reporting charging and battery status information.

Configuring the Charger Mode

NOTE: By default, the Charger Mode is set to 3-Stage.

1. Press and hold the Charger Mode Select button for three seconds to advance to the next setting.
2. Select the proper charger mode.
   The LEDs will indicate which of the two modes is being selected: three-stage (default) or two-stage.

Configuring the Battery Bank Type

NOTE: By default, the battery type is set to Flooded.

1. Press and hold the Battery Type Select button for three seconds to advance to the next setting.
2. Select the proper battery type.
   The LEDs will indicate which of the five types is being selected: Flooded (default), GEL, Lead Calc., AGM, and Custom. The Custom setting is indicated when all four battery type LEDs are illuminated. This setting should only be used if a custom algorithm has been programmed by Xantrex or a designated OEM.

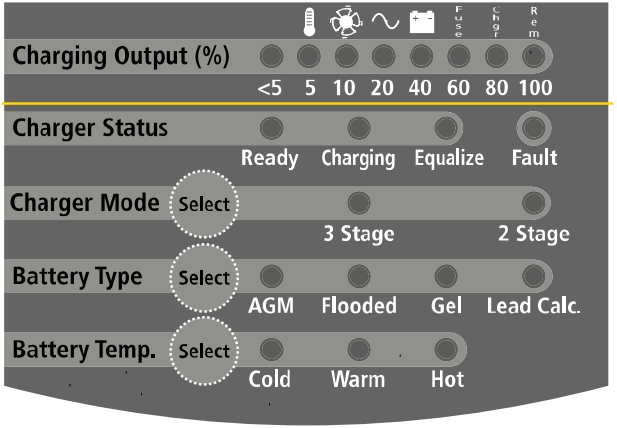

Figure 11 Onboard Display Panel

Charging Batteries

Before you start to charge batteries read the “Important Safety Instructions” on page iii and follow all safety precautions when working with batteries.

To charge your batteries:

1. If possible, disconnect any heavy loads on the batteries being charged, by opening disconnect switches or by switching the loads off.
2. Connect the batteries to the charger by closing the DC disconnect switches.
   NOTE: The onboard display LEDs will light up for a second.
3. Ventilate the area around the battery thoroughly during charging. Review the charging instructions supplied by the manufacturer of your batteries and follow all safety precautions and the required steps.
4. Apply AC power to the Truecharge2 Battery Charger by:
   - closing the AC breaker or
   - turning the generator on.

   All onboard display indicator LEDs will illuminate for one second (power on test) as the initialization sequence runs.

   After initialization, the indicator LEDs will display present status and settings. At this point, changes in Battery Type, Battery Temperature, and/or Charger Mode can then be applied.

   These settings are stored in memory (even when all power sources are disconnected) and need not be entered after every initialization. During charging, the Charging Output (%) LEDs will show the total current being delivered to the battery bank as well as any DC load applied. The charger fan may activate as well.
5. After charging is completed, reconnect all loads to the battery.

The charger can be in one of eight different situations which will be indicated on the onboard display in the Charger Status LEDs:

Mode	Charger Status LED—ON
Bulk	Charging
Absorption	Charging
Standby or Rest (two-stage charging)	Ready
Float (three-stage charging)	Ready and Charging
Equalize (in progress)	Equalize (solid light)
Equalize (waiting for absorption to end)	Equalize (flashing)
Fault	Fault[a] (solid light)
Warning	Fault[a] (flashing)

a.In combination with one or more flashing Charging Output % LEDs.

After charging is complete, the Truecharge2 Battery Charger enters into one of these modes:

Float mode When the ready and charging indicator LEDs both illuminate, all batteries are fully charged and ready for use. If you selected the three-stage charging mode, the Truecharge2 Battery Charger is in float mode and will maintain the batteries' charge.

Standby mode Or Rest mode. If you selected the two-stage charging mode, the ready indicator LED shows the charger is now in rest mode and is continuously checking battery voltage.

With either charging mode, the Truecharge2 Battery Charger will begin a charging cycle:

- seven days after the last completed cycle, or
- when the minimum battery terminal voltage drops to below 12.5 V (12 V chargers) or 25 V (24 V chargers) for 15 minutes, or
- when AC is disconnected for more than 15 minutes and then reconnected.

Equalizing Flooded Batteries

NOTICE

RISK OF BATTERY DAMAGE

The Truecharge2 Battery Charger will only equalize flooded lead-acid or lead-calcium batteries. It does not enter equalization when the battery type is set to sealed lead-acid batteries (GEL or AGM) since they will be damaged by this process. Use the correct settings for your battery types.

Failure to follow these instructions can damage the unit and/or damage other equipment.

NOTICE

RISK OF BATTERY DAMAGE

You must monitor the battery specific gravity throughout equalization to determine the end of the equalize cycle.

Failure to follow these instructions can damage the unit and/or damage other equipment.

The Truecharge2 Battery Charger cannot automatically determine when to stop the equalization of a battery. The one hour time-out is intended as a safety feature to require the user to continually re-activate it as necessary after checking batteries manually, but may not be sufficiently short to prevent battery damage.

In the following conditions the Truecharge2 Battery Charger will not enter equalization mode:

- the battery type is set to GEL or AGM
- any battery is not fully charged (all three battery banks must be charged to float or rest stage before equalization can be activated on any bank)[1]
- there is an active fault on the battery you are trying to charge

Xantrex recommends that you run a complete normal charge cycle on the batteries before you equalize them.

⚠ DANGER

EXPLOSION HAZARD

- The battery generates explosive gases during equalization. Follow all of the battery safety precautions listed in this guide.
- Ventilate the area around the battery thoroughly using ventilators with brushless motors and ensure that there are no sources of flame or sparks in the vicinity.

Failure to follow these instructions will result in death or serious injury.

1.In this case an equalization cycle can be programmed to start once the charge cycle is done.

Performing An Equalization

NOTICE

RISK OF EQUIPMENT DAMAGE

- Turn off or disconnect all DC loads on the battery during equalization.
- Do not equalize if the level of equalization voltage (see note below) does not comply with the battery manufacturer's recommendation

Failure to follow these instructions can damage the unit and/or damage other equipment.

NOTE: The voltage applied to the battery during equalization may be above safe levels for some loads but the absolute maximum is 16 V for 12-volt chargers and 32 V for 24-volt chargers within operational temperature range.

⚠ WARNING

EXPLOSION, FIRE, AND BURN HAZARDS

Always wear proper, non-absorbent gloves, complete eye protection, and clothing protection. Avoid touching your eyes and wiping your forehead while working near batteries. See following note.

Failure to follow these instructions can result in death or serious injury.

NOTE: If battery acid contacts skin or clothing, wash immediately with soap and water. If acid enters your eye, immediately flood it with running cold water for at least twenty minutes and get medical attention immediately.

To equalize your batteries:

IMPORTANT: Remember that all connected batteries will undergo the equalization. If only one bank is intended to undergo equalization then the other banks must be disconnected prior to equalization.

1. Check the battery electrolyte level. If necessary, refill with distilled water only. All the cells should have similar electrolyte levels. If the levels are widely different, it will influence the relative concentration of acid, thereby affecting the specific gravity measurements. If distilled water is added, batteries must undergo a complete charge cycle.
2. Program or initiate an equalize cycle. Equalization will begin if all banks are in either float or rest mode.

IMPORTANT: If equalization is programmed prior to float or rest mode, the Equalize LED will flash and equalization will start prior to reaching float or rest mode.

3. Press and hold for five seconds the Charger Mode Select button and Battery Temp Select button at the same time to put the Truecharge2 Battery Charger into equalization mode.

IMPORTANT: The onboard display and remote panel buttons will not allow selection of equalization for AGM and GEL batteries.

When the charger is performing the equalization, the Equalize LED illuminates as a solid light. It will flash intermittently when programmed prior to reaching float or rest mode.

4. Monitor the specific gravity of each cell of the battery during equalization with a battery hydrometer.

   NOTE: The equalization cycle is preset to last for one hour. It is not possible to program another equalization cycle when the present cycle has not ended yet.

   Carefully check the specific gravity of each cell and repeat the equalization cycle until they all meet the battery manufacturer's specifications for specific gravity or until the specific gravity stabilizes relative to each other for an hour.

   The charger automatically exits equalization to float mode or rest mode after one cycle. To manually exit equalization mode early, repeat Step 3.

5. Check the battery electrolyte level. If necessary, refill with distilled water only and repeat a normal charge cycle.

Transitioning the Charger to ON, Standby, or Disabled

There are two ways to turn ON the Truecharge2 Battery Charger:

- Connect the batteries to the charger (i.e., charger is on standby) then connect AC power at the source. If the batteries are not fully charged then charging begins immediately. If the batteries are fully charged then charging will go to either standby (two-stage) or float (three-stage).

  Or,

- Press ON/STANDBY on the optional remote panel while batteries and AC power are both connected to the charger (from Standby).
  The charger begins to charge the batteries from Standby.

There are two ways to put the Truecharge2 Battery Charger in Standby (see Warning below)**:**

- Disconnect AC power at the source (i.e., only the batteries are connected) or
- Press ON/STANDBY on the optional remote panel while batteries and AC power are both connected to the charger (from ON).
  The charger stops charging but continues to monitor the batteries.

⚠ DANGER

ELECTRICAL SHOCK HAZARD

- Do not disassemble the battery charger. Internal capacitors remain charged for five minutes after all power is disconnected.
- Disconnect both AC and DC power from the battery charger before attempting any maintenance or cleaning or working on any circuits connected to the battery charger. See note below.

Failure to follow these instructions will result in death or serious injury.

There is only ONE way to safely turn the Truecharge2 Battery Charger off (Disable):

Disconnect the AC power at the source and disconnect all DC batteries.

This is the only state where the Truecharge2 Battery Charger is completely de-energized.

When the Truecharge2 Battery Charger is disabled, the optional remote panel is inactive.

Accessing Charger Information

The Truecharge2 Battery Charger provides a lot of information about the status of the charger and the batteries.

Reading Onboard Display LEDs

The Fault LED works in conjunction with the Charging Current (%) LEDs. The icons at the top row above the Charging Current (%) LEDs represent the various types of fault and warning conditions. For example, a temperature warning is represented by a thermometer icon.

The Charging Current (%) LEDs will normally illuminate as a solid progress bar when they are indicating the amount of output charging current. If any of the LEDs start to flash intermittently at the same time that the Fault LED is either solid or flashing, a fault or warning condition is indicated.

IMPORTANT: A warning condition notifies the user of an impending problem and will not stop the charger from charging, while a fault condition will stop the charger from charging the battery.

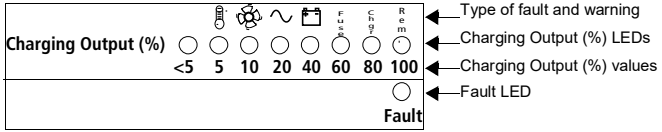

Figure 12 Charging Output (%) and Fault LEDs

Table 9, “Interpreting Fault and Warning Indicators” on page 43 summarizes the various fault conditions that might occur during the operation of the charger.

Reporting While Charging or Equalizing

After configuring the charger and during charging, the onboard display panel (and the optional remote panel, if installed) will show the following information about the charger and the battery:

- Charging Output Current
- Charger Status
- Battery Status (available on the optional remote panel only)

If there is a fault or warning related to one of the banks, the fault or warning information will display in the form of illuminating or flashing Fault indicator LEDs. Charging for all banks will stop and will only resume once the fault condition is cleared. However, charging will continue during warning conditions.

Reporting Without AC Power or While on Standby

If AC power has been disconnected or if you have used the optional remote panel to place the Truecharge2 Battery Charger on Standby mode, the onboard display (and the optional remote panel, if installed) LEDs will be turned off to conserve battery power. However, present settings and battery status can be viewed momentarily by pressing the Status button on the optional remote panel to initialize a view cycle that will show the status of the batteries.

The remote panel LEDs will turn off after 30 seconds of inactivity.

Indicator LEDs on the Onboard Display Panel

All indicator LEDs on the Onboard Display panel (and the optional remote panel, if installed) will illuminate for one second when AC or DC power is supplied to the Truecharge2 Battery Charger or when the charger is turned on using the ON/STANDBY button on the remote panel. A “power on” test indicates that the charger is now receiving AC power, and all LEDs are functioning.

The Truecharge2 Battery Charger will recover from fault conditions automatically when the cause of the fault or warning has disappeared. Under fault conditions, the charging process will be stopped, allowing either the charger or the battery or both to return within acceptable operating ranges. See “Specifications” on page 54 for more information on normal operating ranges.

To interrupt or cease the charging process, disconnect the AC power source from the charger. If you have the optional remote panel, you can put the charger in Standby mode by pressing the ON/STANDBY button to interrupt the charging process.

Table 8 Charger Status LED Sequences

Charger Status LED Activity	Charger status
Ready LED illuminates solid	The charger is in standby (or rest) mode of two-stage charging. All batteries have been fully charged.
Ready and Charging LEDs illuminate solid	The charger is in float mode of three-stage charging. All batteries have been fully charged.
Charging LED illuminates solid	The charger is charging in bulk or absorption mode
Equalize LED flashes	The charger will perform an equalization cycle after the absorption stage.
Equalize LED illuminates solid	The charger is currently implementing an equalization cycle for all batteries.
Fault LED flashes	A warning condition. See “Interpreting Fault and Warning Indicators” on page 43.
Fault LED illuminates solid	A fault condition. See “Interpreting Fault and Warning Indicators” on page 43.

Table 9 Interpreting Fault and Warning Indicators

Fault or Warning Condition	Temp	Fan	AC	Battery	Fuse	Charger	Remote	Fault	Solution
AC input out of range fault (<85 V or >265 V)			☼					●	• Check AC connections. Change to a more stable AC power source and check that the voltage and voltage frequency are within acceptable operating range. See “Specifications” on page 54.
High Battery Temp fault (>70°C)	☼			☼				●	• Check the batteries. Do not charge a battery that is rated other than 12 V nominal for all 12-volt chargers or 24 V nominal for all 24-volt chargers. Check that the battery type and temperature settings match the actual battery and its conditions. • Disconnect or turn off other charging sources such as an alternator or the charger on a generator with an electric start. • Allow the battery (or batteries) to cool to normal operating temperature. See “Specifications” on page 54.

☼ Flashing LED ● Solid LED

Table 9 Interpreting Fault and Warning Indicators

Fault or Warning Condition	Temp	Fan	AC	Battery	Fuse	Charger	Remote	Fault	Solution
Low Battery Temp fault (< -25°C)	☼			☼				●	• Check the batteries. Do not charge a frozen battery. Charging a frozen battery may present a risk of explosion. Check that the battery type and temperature settings match the actual battery. • Allow the battery (or batteries) to warm up to a temperature that is above freezing before charging. See “Specifications” on page 54.
High Battery voltage fault (>16.5V for 12-volt chargers) (>33V for 24-volt chargers)				☼				●	• Discontinue charging or disconnect AC power source from supplying power to the charger. • Disconnect voltage sensitive DC loads from DC supply to prevent damage. • If the DC bus voltage is still measuring high after AC power has been disconnected, call a qualified and certified electrician.
High Charger Temp fault	☼					☼		●	• Allow the Truecharge2 Battery Charger to cool while the AC is connected so the fan stays on. • Improve ventilation or install the charger in a cooler location.
Loss of Remote Connection warning							☼	☼	• Reconnect the communication cable to the port. It takes about 15 seconds to re-establish communication.

☼ Flashing LED ● Solid LED

Table 9 Interpreting Fault and Warning Indicators

Fault or Warning Condition	Temp	Fan	AC	Battery	Fuse	Charger	Remote	Fault	Solution
Reverse Polarity Fuse fault					Fuse				• Check for reverse battery polarity (negative connected to negative, positive connected to positive is correct) at battery and charger output terminals. • Disconnect AC and DC sources before replacing the fuse(s) on the charger. See “Replacing the DC Output Fuse” on page 48.
Internal fault						Chgr	Rem		• Call Xantrex for support.

Flashing LED Solid LED

Using A Generator As Source Power

The Truecharge2 Battery Charger can be run from a regular AC power source or from an alternate power source such as a generator. Refer to “AC Input Specifications” on page 54 for AC input current draw to determine the size of generator you need. Many generators provide output voltage that is modified sine wave or modified square wave (MSW) rather than the true sine wave (TSW) that your utility provides.

If a generator needs to run on full load capacity to supply charging current to the battery via the battery charger, its output frequency and amplitude may become unstable. This scenario can cause the battery charger to shutdown. Using the current limiting feature[1] from the remote panel can help avoid this scenario.

The Truecharge2 Battery Charger may be used with MSW generators but its lifetime may be reduced somewhat depending on the severity of any peak voltage overshoots, and the severity of waveshape rise times.

1.See “Configuring the Maximum Output Current Percentage of the Charger” on the Truecharge2 Remote Panel Owner’s Guide.

Maintaining the Charger

⚠ DANGER

ELECTRICAL SHOCK HAZARD

Do not disassemble the battery charger. See note below.

Failure to follow these instructions will result in death or serious injury.

NOTE: The Truecharge2 Series Battery Charger contains no user-serviceable parts with the exception of the DC output fuse(s) which are user-replaceable. See “Replacing the DC Output Fuse” on page 48 for instructions. For obtaining service other than replacing the fuse, contact customer support for guidance.

The Truecharge2 Battery Charger contains solid-state electronic components that require no maintenance. The best care you can give the charger is to protect it from contact with liquids, spray, or fumes which may cause corrosion and by keeping the air intake vent clean and free from any obstructions.

Disconnect all AC and DC power and clean the outside of the case and wiring with a damp cloth. Wear protective gloves, if you suspect it has come in contact with battery fluid, salt water, gasoline or oil, or other corrosive material. Do not operate if the charger contains moisture of any kind.

Periodically, disconnect all AC and DC sources and check all DC and AC wiring connections to be sure they have not loosened or deteriorated. Also check all cable clamps to ensure they are tightly fastened.

Loose battery terminals and lugs exposed to open air corrode rapidly. The corrosion appears as a white powder or granular foam on the terminals and any nearby exposed metal parts. If it contacts your skin, it will cause burns unless you rinse it off immediately.

To clean battery terminals, follow the recommendations and procedures of the battery manufacturer.

Replacing the DC Output Fuse

NOTICE

IMPROPER INSTALLATION BY AN UNQUALIFIED INSTALLER

Xantrex recommends that the installer should have knowledge and experience in installing electrical equipment, knowledge of the applicable installation codes, and awareness of the hazards involved in performing electrical work and how to reduce those hazards.

Failure to follow these instructions can damage the unit and/or damage other equipment.

⚠ DANGER

ELECTRICAL SHOCK HAZARD

Disconnect all AC and DC sources to the charger and wait five minutes for internal voltage and energy levels to reduce to safe levels.

Failure to follow these instructions will result in death or serious injury.

To replace the DC Output Fuse:

1. Locate the fuse cover on the charger's top panel (see "Front Panel" on page 3).
2. Loosen the screw on the fuse cover using a Phillips screwdriver.
   NOTE: The screw will not separate from the cover.
3. Pull out the blown fuse(s) gently, using the provided fuse puller.
   NOTE: The fuse puller is located on the inside of the fuse cover.
4. Install a brand new fuse(s) with same type and rating as the old one. See "Fuse Replacement Ratings" on page 49.
5. Replace the fuse cover making sure that it aligns and fits perfectly, leaving no space for moisture or small debris to enter the compartment.
6. Tighten the screw on the fuse cover but do not over-tighten.
7. Fix the reverse polarity fault which caused the fuse to blow prior to reconnecting all AC and DC sources to the charger.
8. Reconnect all AC and DC sources to the charger.

Fuse Replacement Ratings

NOTICE

RISK OF EQUIPMENT DAMAGE

For continued protection, replace only with Littelfuse® type 257 (or equivalent) with ratings as shown below.

Failure to follow these instructions can damage the unit and/or damage other equipment.

Model	Amperage	Voltage
TC2012	30 A (green)	32 Vdc
TC4012	2×30 A (green)	32 Vdc
TC6012	3×30 A (green)	32 Vdc
TC1024	15 A (blue)	32 Vdc
TC2024	15 A (blue)	32 Vdc
TC3024	40 A (amber)	32 Vdc

Troubleshooting

In the event that you have a problem with your Truecharge2 Battery Charger, the following tables will help you to identify the problem and offer possible solutions to the problem.

Symptom

Indicator LEDs do not illuminate when charger is connected to an AC power source.

Possible Cause	Solution
No power at AC source	Ensure that power is available at charger AC input and it is within acceptable range.
Defective AC wiring or switches/breakers	Wiring must be inspected and replaced by a qualified installer.
Remote panel has been used to put the charger into Standby mode.	Press the On/Standby button on the remote panel to turn the charger on.

Symptom

The initial power up display test is not performed upon connection of battery or batteries.

Possible Cause	Solution
Truecharge2 Battery Charger does not detect battery for one of the following reasons: • poor connection • reverse polarity connection (blown fuse) • damaged wiring • open DC breaker or external fuse • battery voltage is below 9 V	Check quality of battery connection and wires. Ensure correct polarity (negative connected to negative, positive connected to positive). In case there is an accompanying fault, check the type of fault from "Interpreting Fault and Warning Indicators" on page 43.

Symptom

Fault indicator LED illuminates. Temp and Battery indicator LEDs flash.

⚠ WARNING

EXPLOSION HAZARD

Never charge a frozen battery.

Failure to follow these instructions can result in death or serious injury.

Possible Cause	Solution
Battery temperature is either too hot or too cold for safe charging.	If battery is too hot, allow battery to cool. Improve ventilation or install in a cooler location. If the optional remote panel is available, you may reduce the output current using the Set Max Output button. If battery is too cold, allow batteries to warm up.

Symptom

Truecharge2 Battery Charger completes a charging cycle, but the battery voltage seems too low.

Possible Cause	Solution
Battery has a shorted cell.	Disconnect AC to the charger and check the battery voltage approximately one hour later. **NOTE:** If the charger is functioning properly but the charge cycles fail to bring the resting voltage up above 10 V for 12-volt chargers and 20 V for 24-volt chargers, then this confirms the battery has a damaged or shorted cell. Replace battery. The battery has reached the end of its useful life and can no longer accept a charge.

Symptom

The Truecharge2 Battery Charger appears to be taking too long to charge battery. Ready indicator LED does not illuminate after 24 hours of charging.

Possible Cause	Solution
Battery capacity is too high for the Truecharge2 Battery Charger model.	Use a higher capacity charger.
Load connected to battery is draining charge current so that battery does not recharge.	Disconnect all loads or switch loads off.
Battery has a damaged cell or has reached the end of its useful life.	Replace battery.
The remote panel Max Output setting is too low for the battery capacity.	Increase the Max Output setting.

Symptom

The Truecharge2 Battery Charger appears to have quickly charged the battery. Ready indicator LED illuminates sooner than expected.

Possible Cause	Solution
Battery capacity is too low for the Truecharge2 Battery Charger model.	Use a lower capacity charger. Using the optional remote panel (if installed), reduce the output current delivered to the smaller battery.
Battery has a damaged cell or has reached the end of its useful life.	Replace battery.

Symptom

The Truecharge2 Battery Charger will not perform equalization.

Possible Cause	Solution
Battery is the wrong type, or set to the wrong type to equalize.	Determine if the battery type is set to GEL or AGM. These battery types cannot be equalized.
Not all batteries are fully charged.	The charger will wait for all batteries to be in float stage of three-stage charging or rest stage of two-stage charging before attempting to equalize (the ready indicator LED will illuminate).
An active fault is present on the bank you are attempting to equalize.	Clear the active fault by disconnecting the AC power source and finding the cause of the fault from “Interpreting Fault and Warning Indicators” on page 43.

Specifications

NOTE: Specifications are subject to change without prior notice.

Physical Specifications

Base Unit Dimensions: L × W × H	
TC2012, TC4012	250×170×70 mm (9.84×6.70×2.76 in.)
TC1024, TC2024	250×170×70 mm (9.84×6.70×2.76 in.)
TC6012, TC3024	340×170×90 mm (13.38×6.70×3.54 in.)
Weight	
TC2012, TC4012	2.2 kg (4.8 lbs)
TC1024, TC2024	2.2 kg (4.8 lbs)
TC6012, TC3024	4.5 kg (9.9 lbs)
AC input connections	Three color-coded No. 16 AWG wires (L, N, GND) minimum 152 mm (6 in.) long in a separate AC wiring enclosure with 21.3 mm (0.84 in.) hole provision for connection of a ½ inch North American "trade size" strain relief (included).
AC input connections (IEC models only)	IEC 60320 C14 male connector receptacle
DC output connections	Four M6 studs (3 positives and 1 common negative) for battery cable ring terminals and one M6 mm DC equipment ground

AC Input Specifications

AC input voltage range	
Nominal:	120 Vac, 230 Vac, 240 Vac
Full Performance:	104 – 265 Vac ±4 Vac
Automatic derating to 80% output:	90 – 108 ±4 Vac
Max. AC input current	
TC2012:	3.9 A
TC4012:	7.7 A
TC6012	11.6 A
TC1024:	3.9 A
TC2024:	7.7 A
TC3024	11.6 A
Power factor at rated load	≥0.95
Frequency	47 – 63 Hz
Efficiency – peak	
12/24-volt units:	80% @ 120 Vac
12/24-volt units:	84% @ 230 Vac
Surge protection	Line-to-neutral surge protector rated at 275 Vac

DC Output Specifications

Number of isolated battery bank outputs	3 separated outputs
DC output voltage range including dead battery charging voltage	
12-volt units:	0 – 16 Vdc
24-volt units:	0 – 32 Vdc
Maximum equalization voltage	
12-volt units:	16 Vdc
24-volt units:	32 Vdc
Voltage accuracy (no load)	
12-volt units:	14.4 ±0.1 Vdc @ 25 °C (77 °F)
24-volt units:	28.8 ±0.2 Vdc @ 25 °C (77 °F)
Nominal battery voltage	
12-volt units:	12 Vdc
24-volt units:	24 Vdc

DC Output Specifications

Normal operating output range	
12-volt units:	0 – 16 Vdc
24-volt units:	0 – 32 Vdc
Maximum DC output current (total)	
TC2012:	20 +10% A
TC4012:	40 +10% A
TC6012	60 +10% A
TC1024:	10 +10% A
TC2024:	20 +10% A
TC3024:	30 +10% A

Absorption voltage:

	12-volt units 25 °C (77 °F)	**24-volt units 25 °C (77 °F)**
Flooded	14.4 ±0.1	28.8 ±0.2
GEL	14.2 ±0.1	28.4 ±0.2
AGM	14.3 ±0.1	28.6 ±0.2
Lead-calcium	15.5 ±0.1	31.0 ±0.2

DC Output Specifications

Float voltage:		
	12-volt units 25 °C (77 °F)	**24-volt units 25 °C (77 °F)**
Flooded	13.5 ±0.1	27.0 ±0.2
GEL	13.8 ±0.1	27.6 ±0.2
AGM	13.4 ±0.1	26.8 ±0.2
Lead-calcium	13.5 ±0.1	27.0 ±0.2
Equalize mode current	50% rated output ±6%	
Equalize mode—maximum output voltage		
12-volt units:	16 ±0.1 Vdc	
24-volt units:	32 ±0.2 Vdc	
Off-state current draw (without remote installed)	<35 mA dc	

DC Output Specifications

Voltage regulation	Uncompensated load voltage regulation < 0.1Vdc drop from 0 Amps to rated current output at charger output terminals (adds in series with recommended 3% limit for user's battery cable voltage drop).

Environmental Specifications

Operating range	0 – 60 °C (32 – 140 °F) with up to 80% current derating above 40 °C (104 °F) and up to 50% current derating above 50 °C (122 °F)
Storage	–40 to 80 °C (–40 to 176 °F)
Humidity	5 – 95%, RH non-condensing

Protection Features

Battery reverse polarity	Protected by replaceable DC output fuses
Over-voltage limits	The Truecharge2 Battery Charger will stop charging if the output voltage is above 16.6 ±0.5 Vdc for 12 Vdc units, 33.2 ±0.1 Vdc for 24 Vdc units.
Output current limit TC2012: TC4012: TC6012: TC1024: TC2024: TC3024:	 20 +10% A 40 +10% A 60 +10% A 10 +10% A 20 +10% A 30 +10% A
Over-temperature (measured internally)	Shutdown at 65 ±5 °C (149 ±9 °F) Restart at 60 ±5 °C (140 ±9 °F)
Battery over-temperature protection	Charger shuts down if battery temperature above 70 °C (158 °F) is sensed by the battery temperature sensor (BTS).

Protection Features

Battery under-temperature protection	Charger shuts down if battery temperature below –25 °C (–13 °F) is sensed by the battery temperature sensor (BTS).

Regulatory Approvals

Safety	
North America	NRTL listed to CSA E60335-2-29, UL1236 including the marine supplement, and UL1564. ABYC E11 - Alternating Current and Direct Current Electrical Systems on Boats, and ABYC A31 - Battery Chargers and Inverters.
European Union	CE marked for the Low Voltage Directive 2014/35/EU, (complying with EN60335-1 and EN60335-2-29 Battery Chargers). EN 28846 - Small Craft Electrical Devices, Protection against ignition of surrounding flammable gases.
Australia/New Zealand	RCM marked to AS/NZS 60335.1 and AS/NZS 60335.2.29 including Australian/New Zealand deviations.
EMC	
North America	Class B according to FCC Part 15B and ISED Canada ICES-003.
European Union	CE marked for the EMC Directive 2014/30/EU (complying with EN55014-1 (Class B), EN55014-2, EN61000-3-2, and EN61000-3-3).
Environmental	
European Union	CE marked for the RoHS Directive 2011/65/EU (complying with EN50581).

xantrex

Smart choice for power

www.xantrex.com
(Toll Free USA/Canada) +1 800 670 0707
(Outside USA/Canada) +1 408 987 6030

975-0526-01-02 Rev E

Printed in China.